Menu

LONCIN 隆鑫

General Power Products

Water Pump

50ZB23-3.1Q(A) • 80ZB20-3.1Q(A)

50ZB60-4.5Q • 80WB30-4.5Q

100ZB30-5.5Q

Owner's Manual

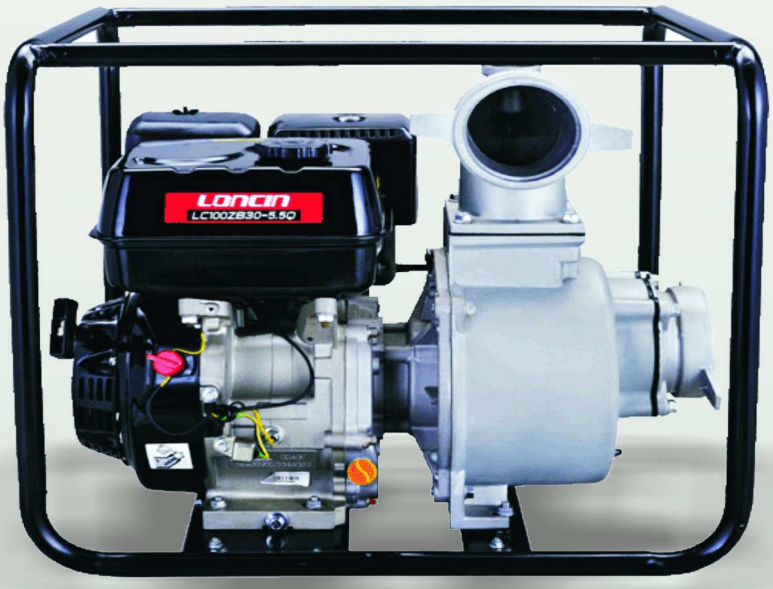

Thank you for purchasing a water pump.

This manual covers the operation and maintenance of water pump: 50ZB23-3.1Q(A)/ 80ZB20-3.1Q(A)/50ZB60-4.5Q/80WB30-4.5Q/100ZB30-5.5Q

The information and specifications included in this publication were in effect at the time of approval for printing.

No part of this publication may be reproduced without written permission.

This manual should be considered a permanent part of the pump and should remain with the pump if it is resold.

The illustrations in this manual are based in: 80ZB20-3.1Q
The illustration may vary according to the type.

Keep this owner’s manual handy, so you can refer to it at any time. This owner’s manual is considered a permanent part of the water pump and should remain with the water pump if resold.

If a problem should arise, or if you have any questions about the pump, consult you authorized dealer.

CONTENTS

1. PUMP SAFETY …….. 3
2. COMPONENTS & CONTROL LOCATIONS …… 5
3. CONTROLS ……6
4. CHECK BEFORE OPERATION 8
5. OPERATION ……..12
6. STARTING THE ENGINE .....……15
7. STOPPING THE ENGINE 17
8. MAINTENANCE 18
9. TRANSPORTING/STORAGE ……..…… 25
10. TROUBLESHOOTING …… …….. 29
11. SPECIFICATIONS ……31
12. CONSUMER INFORMATION 32

1. PUMP SAFETY

Your safety and the safety of others are very important. And using this water pump safely is an important responsibility.

To help you make informed decisions about safety, we have provided operating procedures and other information on labels and in this manual. This information alerts you to potential hazards that could hurt you or others.

Of course, it is not practical or possible to warn you about all the hazards associated with operating or maintaining a water pump. You must use your own good judgment.

You will find important safety information in a variety of forms, including:

Safety Labels — on the pump.

Safety Messages — preceded by a safety alert symbol ⚠ and one of three signal words, DANGER, WARNING, or CAUTION. These signal words mean:

⚠ DANGER **You WILL be KILLED or SERIOUSLY HURT if you don't follow instructions.**

⚠ WARNING **You CAN be KILLED or SERIOUSLY HURT if you don't follow instructions.**

⚠ CAUTION **You CAN be HURT if you don't follow instructions.**

NOTICE **Your pump or other property could be damaged if you don't follow instructions.**

Safety Headings — such as IMPORTANT SAFETY INFORMATION.

Safety Section — such as PUMP SAFETY.

Instructions — how to use this pump correctly and safely.

This entire book is filled with important safety information — please read it carefully.

IMPORTANT SAFETY INFORMATION

The pumps except 80WB30-4.5Q are designed to pump only water that is not intended for human consumption, and other uses can result in injury to the operator or damage to the pump and other property.

Always make a pre-operation inspection before you start the engine. You may prevent an accident or equipment damage.

Most accidents can be prevented if you follow all instructions in this manual and on the pump. The most common hazards are discussed below, along with the best way to protect yourself and others.

Operator Responsibility

It is the operator's responsibility to provide the necessary safeguards to protect people and property. Know how to stop the pump quickly in case of emergency. If you leave the pump for any reason, always turn the engine off. Understand the use of all controls and connections.

Be sure that anyone who operates the pump receives proper instruction. Do not let children operate the pump. Keep children and pets away from the area of operation.

Pump Operation

Pump only water that is not intended for human consumption. Pumping flammable liquids, such as gasoline or fuel oils, can result in a fire or explosion, causing serious injury. Pumping sea water, beverages, acids, chemical solutions, or any other liquid that promotes corrosion can damage the pump.

Refuel With Care

Gasoline is extremely flammable, and gasoline vapor can explode. Refuel outdoors, in a well-ventilated area, with the engine stopped and the pump on a level surface. Do not fill the fuel tank above the fuel strainer shoulder. Never smoke near gasoline, and keep other flames and sparks away. Always store gasoline in an approved container. Make sure that any spilled fuel has been wiped up before starting the engine. After refueling, make sure the tank cap closed properly and securely.

Hot Exhaust

The muffler becomes very hot during operation and remains hot for a while after stopping the engine. Be careful not to touch the muffler while it is hot. Let the engine cool before transporting the pump or storing it indoors.

To prevent fire hazards, keep the pump at least 3 feet (1 meter) away from building walls and other equipment during operation. Do not place flammable objects close to the engine.

Carbon Monoxide Hazard

Exhaust gas contains poisonous carbon monoxide. Avoid inhalation of exhaust gas. Never run the engine in a closed garage or confined area.

2. COMPONENTS & CONTROL LOCATIONS

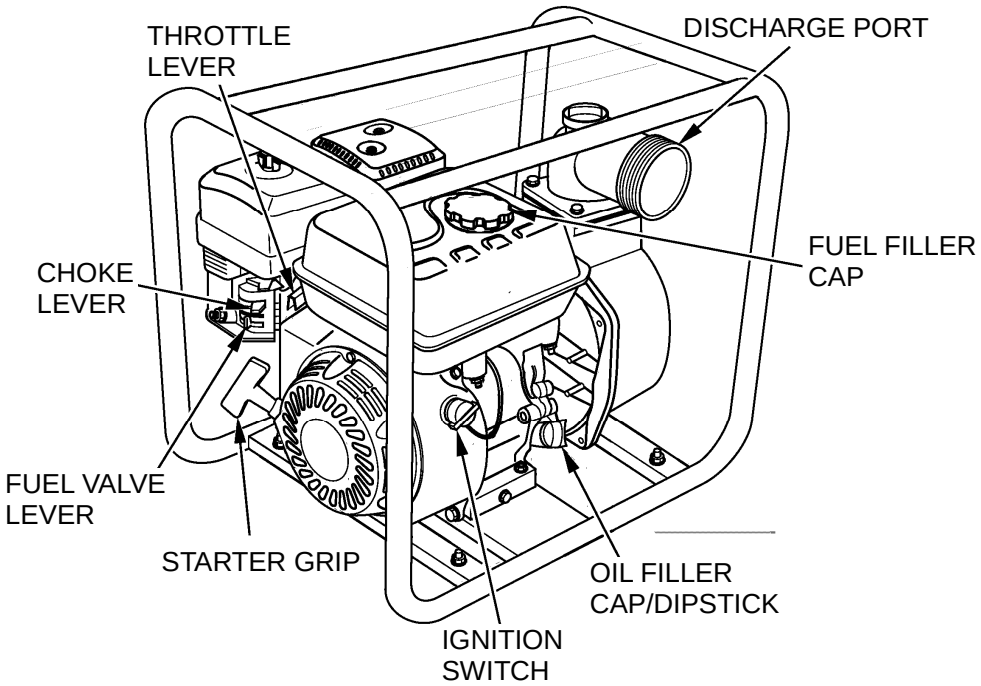

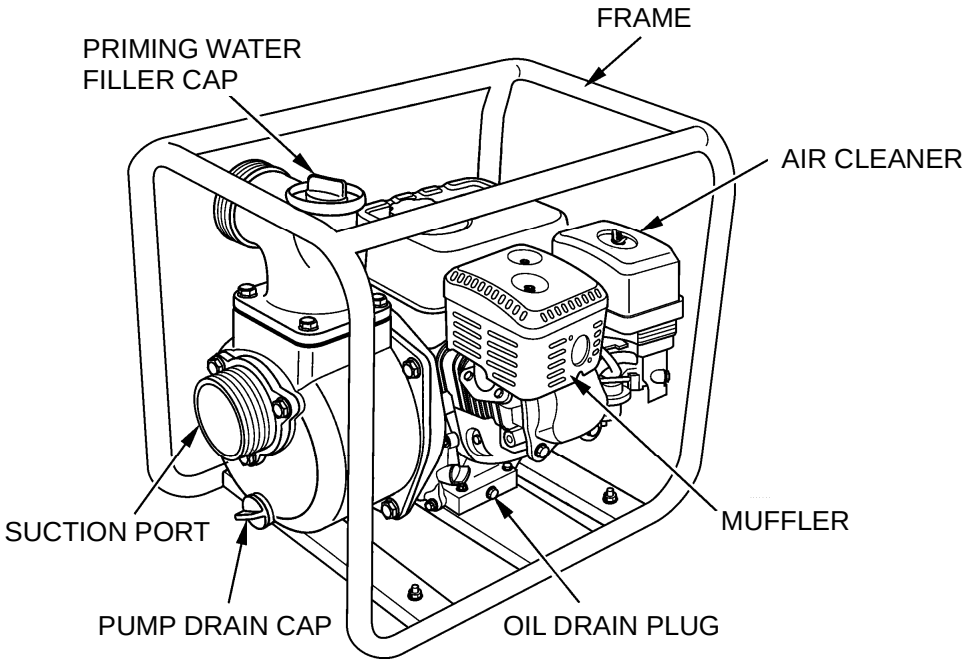

3. CONTROLS

Read and understand this manual. Know what the controls do and how to operate them.

Familiarize yourself with the pump and its operation before you begin pumping. Know what to do in case of emergencies.

Fuel Valve Lever

The fuel valve opens and closes the passage between the fuel tank and the carburetor.
The fuel valve lever must be in the ON position for the engine to run.
When the engine is not in use, leave the fuel valve lever in the OFF position to prevent carburetor flooding and to reduce the possibility of fuel leakage.

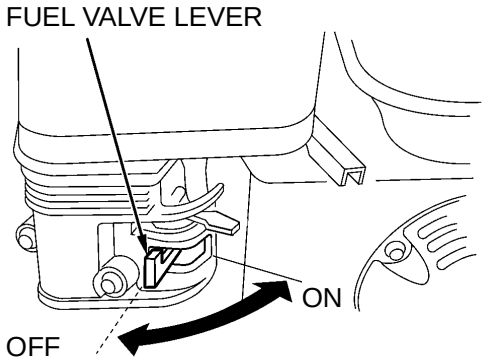

Ignition Switch

The ignition switch controls the ignition system.
The ignition switch must be in the ON position for the engine to run.
Turning the ignition switch to the OFF position stops the engine.

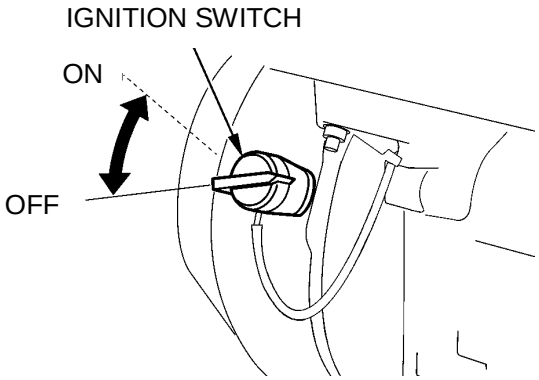

Choke Lever

The choke lever opens and closes the choke valve in the carburetor. The CLOSED position enriches the fuel mixture for starting a cold engine.

The OPEN position provides the correct fuel mixture for operation after starting, and for restarting a warm engine.

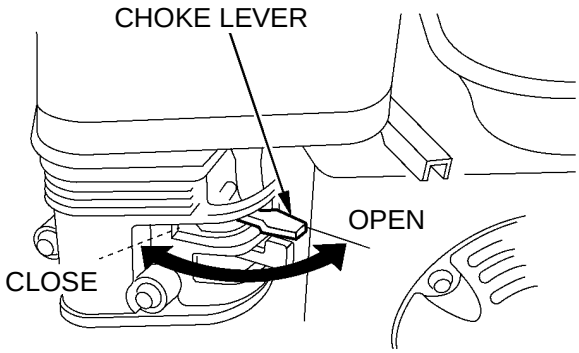

Throttle Lever

The throttle lever controls engine speed.
Moving the throttle lever in the directions shown makes the engine run faster or slower.
Pump output is controlled by adjusting the throttle lever. At maximum throttle position, the pump will deliver the highest output volume. Moving the throttle lever toward the idle position will decrease the output volume of the pump.

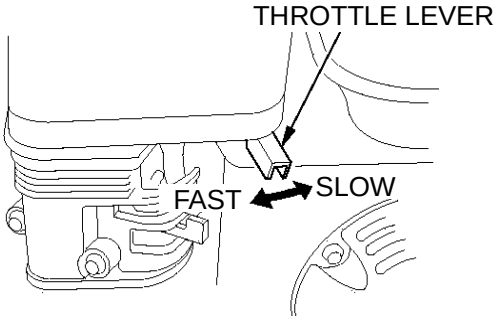

Recoil Starter Grip

Pulling the recoil starter grip operates the recoil starter to crank the engine.

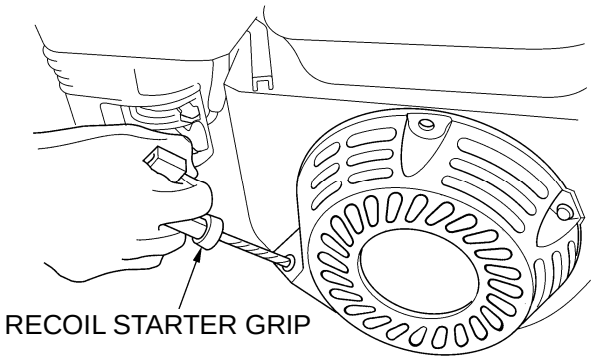

4. CHECK BEFORE OPERATION

Be sure of what you are pumping. This pump is designed to pump only fresh water that is not intended for human consumption.

For your safety, and to maximize the service life of your equipment, it is very important to take a few moments before you operate the pump to check its condition. Be sure to take care of any problem you find, or have your servicing dealer correct it, before you operate the pump.

⚠ WARNING **Improperly maintaining this pump, or failing to correct a problem before operation, could cause a malfunction in which you could be seriously injured.**
Always perform a preoperation inspection before each operation, and correct any problem.

Exhaust gas contains poisonous carbon monoxide. Avoid inhalation of exhaust gas. Never run the engine in a closed garage or confined area.

To prevent fire hazards, keep the pump at least 3 feet (1 meter) away from building walls and other equipment during operation. Do not place flammable objects close to the engine.

Before beginning your preoperation checks, be sure the pump is on a level surface and the ignition switch is in the OFF position.

Check the General Condition of the Pump

Look around and underneath the pump for signs of oil or gasoline leaks.

Remove any excessive dirt or debris, especially around the engine muffler, and recoil starter.

Look for signs of damage.

Check that all nuts, bolts, screws, hose connectors and clamps are tightened.

Check the Suction and Discharge Hoses

Check the general condition of the hoses. Be sure the hoses are in serviceable condition before connecting them to the pump. Remember that the suction hose must be reinforced construction to prevent hose collapse.

Check that the sealing washer in the suction hose connector is in good condition (see page 13).

Check that the hose connectors and clamps are securely installed (see pages 13 & 14).

Check that the strainer is in good condition and is installed on the suction hose (see page 13).

CHECK ENGINE OIL LEVEL

Check the engine oil level with the engine stopped and in a level position.

1. Remove the oil filler cap/dipstick and wipe it clean.

2. Insert and remove the dipstick without screwing it into the filler neck. Check the oil level shown on the dipstick.

3. If the oil level is low, fill to the edge of the oil filler hole with the recommended oil (see page 21).

4. Screw in the oil filler cap/dipstick securely.

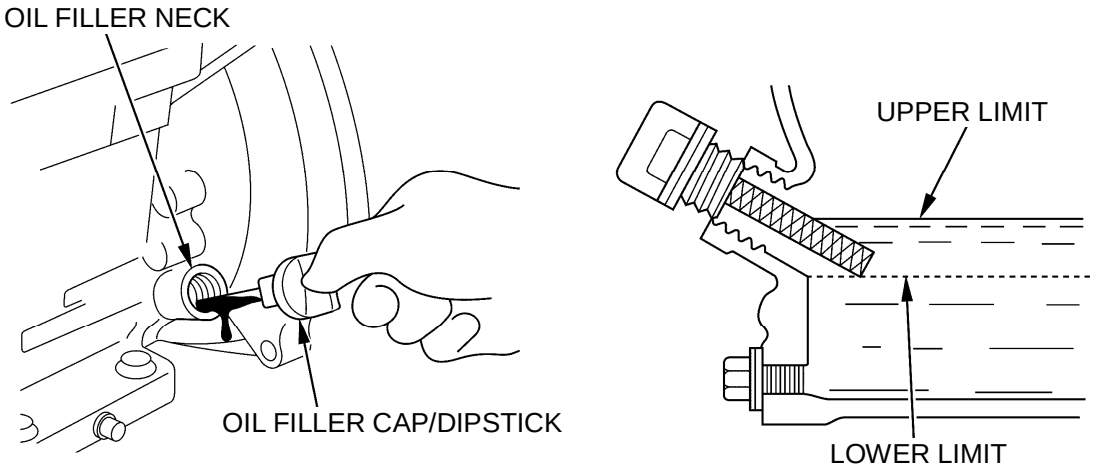

⚠ WARNING **Running the engine with a low oil level can cause engine damage.**

Engine oil capacities：
50ZB23-3.1Q(A)/80ZB20-3.1Q(A)/ 50ZB60-4.5Q/80WB30-4.5Q：0.6 L
100ZB30-5.5Q：1.1 L

AIR FILTER INSPECTION

A dirty air filter will restrict air flow to the carburetor, reducing engine and pump performance.

Remove the air cleaner cover and inspect the filter. Clean or replace dirty filter elements. Always replace damaged filter elements. If equipped with an oil-bath air cleaner, also check the oil level.

Reinstall the air filter and air cleaner cover. Be sure all the parts shown below are in place. Tighten the wing nut securely.

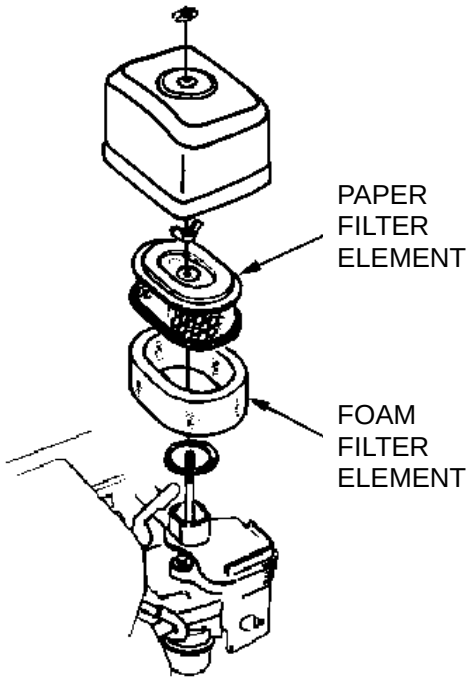

NOTICE **Operating the engine without an air filter, or with a damaged air filter, will allow dirt to enter the engine, causing rapid engine wear. This type of damage is not covered by the Distributor's Limited Warranty.**

CHECK FUEL LEVEL

With the engine stopped and on a level surface, remove the fuel tank cap and check the fuel level. Refill the tank if the fuel level is low. After refueling, tighten the fuel tank cap securely.

⚠ WARNING **Gasoline is highly flammable and explosive. You can be burned or seriously injured when handling fuel.**

- **Stop the engine and keep heat, sparks, and flame away.**
- **Handle fuel only outdoors.**
- **Wipe up spills immediately.**

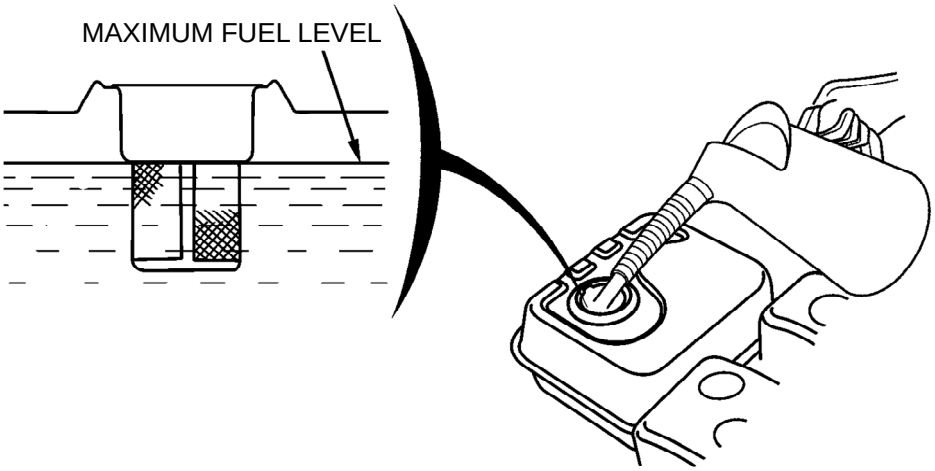

NOTICE **Do not fill above the shoulder of the fuel strainer (maximum fuel level).**

FUEL RECOMMENDATIONS

Use unleaded gasoline with a pump octane rating of 86 or higher.

These engines are certified to operate on unleaded gasoline. Unleaded gasoline produces fewer engine and spark plug deposits and extends exhaust system life.

Never use stale or contaminated gasoline or an oil/gasoline mixture. Avoid getting dirt or water in the fuel tank.

Occasionally you may hear a light ‘‘spark knock’’ or ‘‘pinging’’ (metallic rapping noise) while operating under heavy loads. This is no cause for concern.

If spark knock or pinging occurs at a steady engine speed, under normal load, change brands of gasoline. If spark knock or pinging persists, see an authorized servicing dealer.

NOTICE **Running the engine with persistent spark knock or pinging can cause engine damage.**

Running the engine with persistent spark knock or pinging is misuse, and the Distributor’s Limited Warranty does not cover parts damaged by misuse.

5. OPERATION

SAFE OPERATING PRECAUTIONS

To safely realize the full potential of this pump, you need a complete understanding of its operation and a certain amount of practice with its controls.

Before operating the pump for the first time, please review the IMPORTANT SAFETY INFORMATION on page 3 and the chapter titled CHECK BEFORE OPERATION.

For your safety, avoid starting or operating the engine in an enclosed area, such as a garage. Your engine's exhaust contains poisonous carbon monoxide gas which can collect rapidly in an enclosed area and cause illness or death.

Pump only fresh water that is not intended for human consumption. Pumping flammable liquids, such as gasoline or fuel oils, can result in a fire or explosion, causing serious injury. Pumping sea water, beverages, acids, chemical solutions, or any other liquid that promotes corrosion can damage the pump.

PUMP PLACEMENT

For best pump performance, place the pump near the water level, and use hoses that are no longer than necessary. That will enable the pump to produce the greatest output with the least self-priming time.
As head (pumping height) increases, pump output decreases. The length, type, and size of the suction and discharge hoses can also significantly affect pump output.
Discharge head capability is always greater than suction head capability, so it is important for suction head to be the shorter part of total head.
Minimizing suction head (placing the pump near the water level) is also very important for reducing self-priming time. Self-priming time is the time that takes the pump to bring water the distance of the suction head during initial operation.

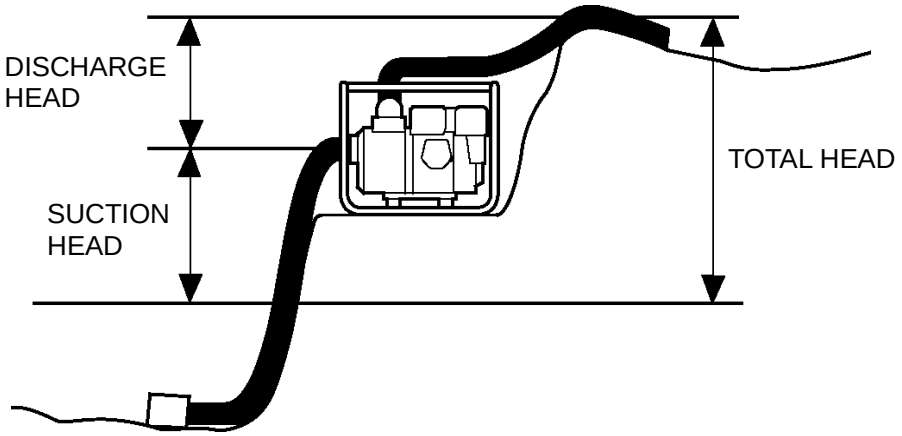

SUCTION HOSE INSTALLATION

Use a commercially available hose and hose connector with the hose clamp provided with the pump. The suction hose must be reinforced with a non-collapsible wall or braided wire construction.

Do not use a hose smaller than the pump's suction port size. Minimum hose size:
50ZB23-3.1Q(A)/50ZB60-4.5Q = 2 in (50 mm) 100ZB30-5.5Q = 4 in (100 mm)
80ZB20-3.1Q(A)/80WB30-4.5Q = 3 in (80 mm)

The suction hose should be no longer than necessary. Pump performance is best when the pump is near the water level, and the hoses are short.

Use a hose clamp to securely fasten the hose connector to the suction hose in order to prevent air leakage and loss of suction. Verify that the hose connector sealing washer is in good condition.

Install the strainer (provided with the pump) on the other end of the suction hose, and secure it with a hose clamp. The strainer will help to prevent the pump from becoming clogged or damaged by debris.

Securely tighten the hose connector on the pump suction port.

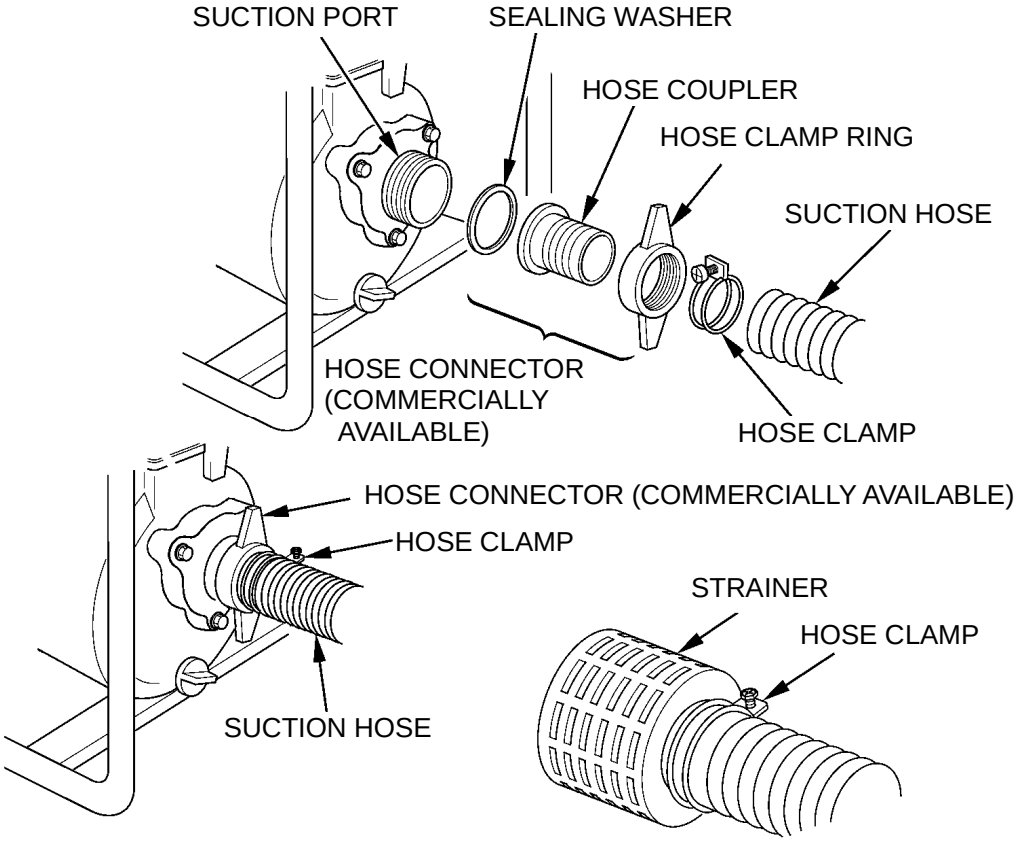

DISCHARGE HOSE INSTALLATION

Use a commercially available hose and hose connector, and clamp provided with the pump.

It is best to use a short, large-diameter hose, because that will reduce fluid friction and improve pump output. A long or small-diameter hose will increase fluid friction and reduce pump output.

Tighten the hose clamp securely to prevent the discharge hose from disconnecting under pressure.

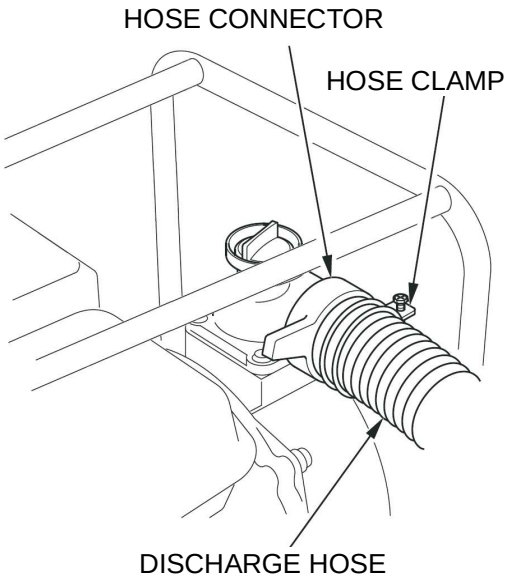

PRIMING THE PUMP

Before starting the engine, remove the filler cap from the pump chamber, and completely fill the pump chamber with water. Reinstall the filler cap, and tighten it securely.

NOTICE **Operating the pump dry will destroy the pump seal. If the pump has been operated dry, stop the engine immediately, and allow the pump to cool before priming.**

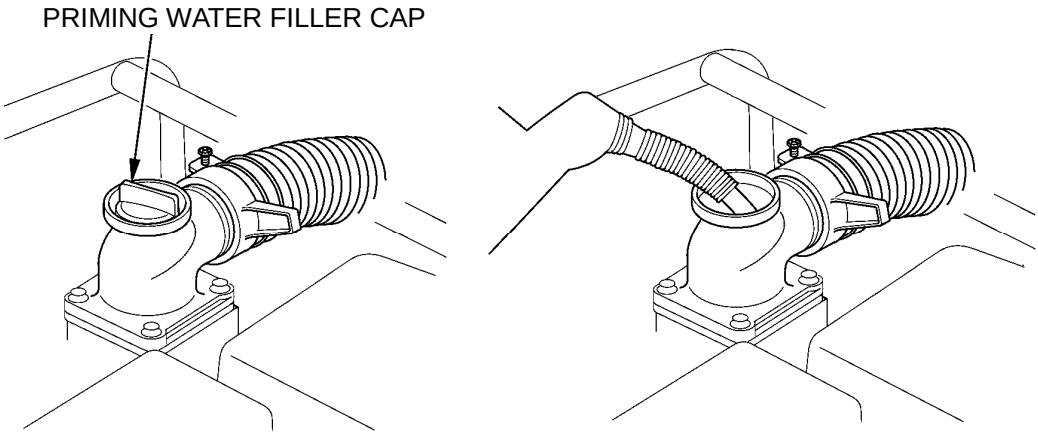

6. STARTING THE ENGINE

1. Prime the pump (see page 14).

2. Move the fuel valve lever to the ON position.

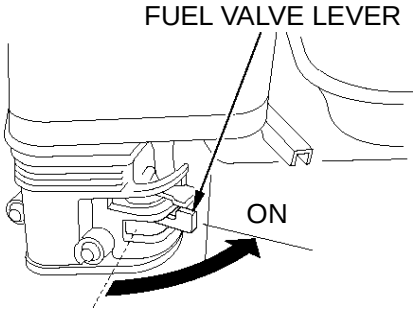

3. To start a cold engine, move the choke lever to the CLOSED position. To restart a warm engine, leave the choke lever in the OPEN position.

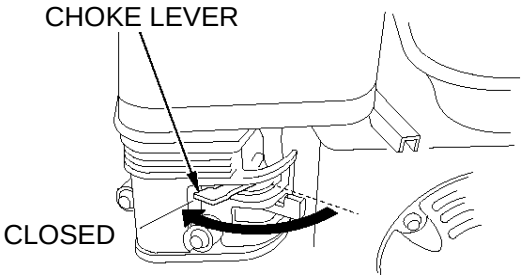

4. Move the throttle lever away from the SLOW position about 1/3 of the way toward the FAST position.

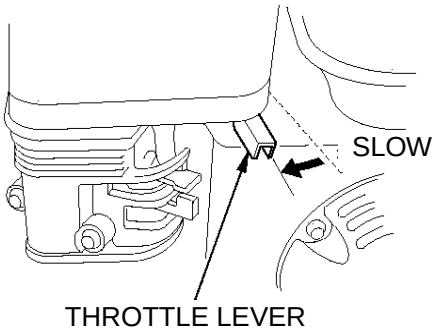

5. Turn the ignition switch to the ON position.

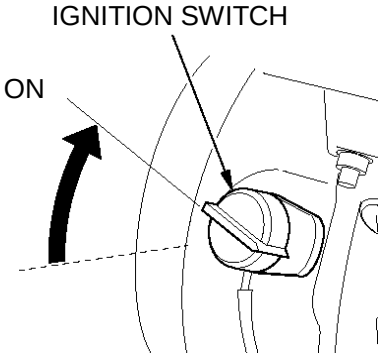

6. Pull the recoil starter grip lightly until resistance is felt, then pull it briskly.

   Do not allow the recoil starter grip to snap back against the engine.

   Return it gently to prevent damage to the starter.

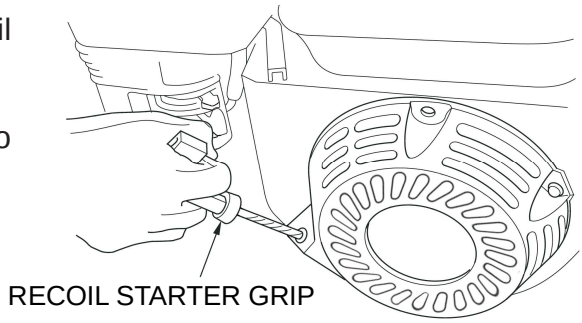

7. If the choke lever was moved to the CLOSED position to start the engine, gradually move it to the OPEN position as the engine warms up.

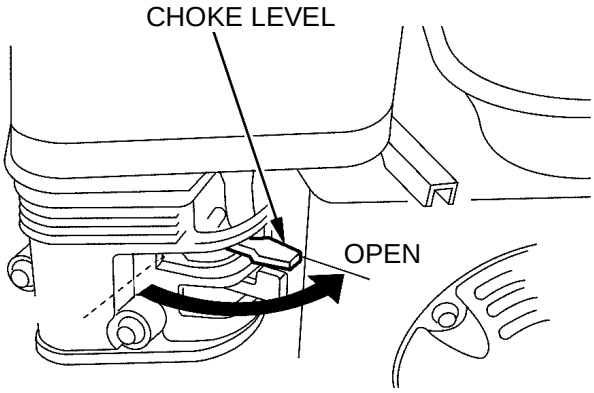

8. setting engine speed

After starting the engine, move the throttle lever to the FAST position for self-priming, and check pump output.

Pump output is controlled by adjusting engine speed. Moving the throttle lever in the FAST direction will increase pump output, and moving the throttle lever in the SLOW direction will decrease pump output.

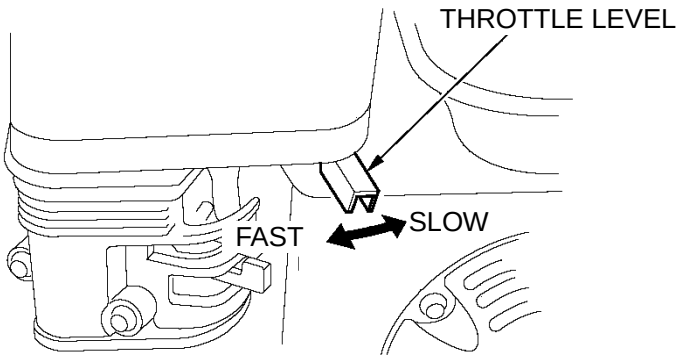

7. STOPPING THE ENGINE

To stop the engine in an emergency, simply turn the ignition switch to the OFF position. Under normal conditions, use the following procedure.

1. Move the throttle lever to the SLOW position.

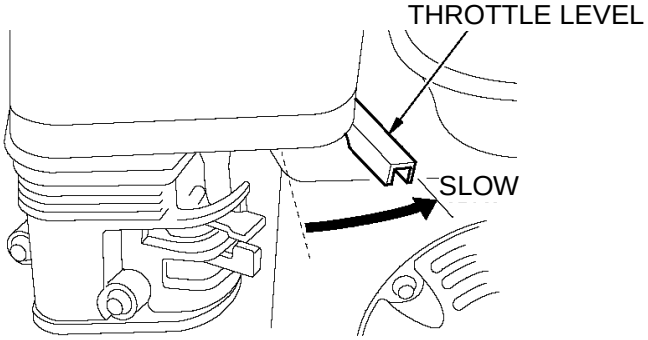

2. Turn the ignition switch to the OFF position.

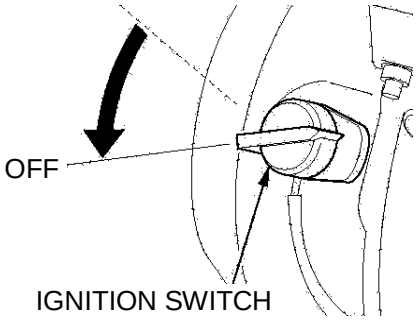

3. Turn the fuel valve lever to the OFF position.

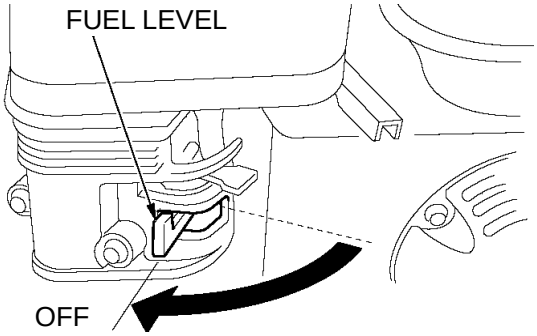

After use, remove the pump drain plug (see page 39), and drain the pump chamber. Remove the filler cap, and flush the pump chamber with clean, fresh water. Allow the water to drain from the pump chamber, then reinstall the filler cap and drain plug.

8. MAITENANCE

THE IMPORTANCE OF MAINTENANCE

Good maintenance is essential for safe, economical, and trouble-free operation. It will also help reduce air pollution.

⚠ WARNING **Improperly maintaining this pump, or failing to correct a problem before operation, can cause a malfunction in which you can be seriously hurt or killed.**
Always follow the inspection and maintenance recommendations and schedules in this owner's manual.

To help you properly care for your pump, the following pages include a maintenance schedule, routine inspection procedures, and simple maintenance procedures using basic hand tools. Other service tasks that are more difficult, or require special tools, are best handled by professionals and are normally performed by a technician or other qualified mechanic.

The maintenance schedule applies to normal operating conditions. If you operate your pump under severe conditions, such as sustained high-load or high-temperature operation, or use in unusually wet or dusty conditions, consult your servicing dealer for recommendations applicable to your individual needs and use.

Remember that your servicing dealer knows your pump best and is fully equipped to maintain and repair it.

To ensure the best quality and reliability, use only new, genuine parts or their equivalents for repair and replacement.

Maintenance, replacement, or repair of emission control devices and systems may be performed by any engine repair establishment or individual, using parts that are "certified" to EPA standards.

MAINTENANCE SAFETY

Some of the most important safety precautions follow. However, we cannot warn you of every conceivable hazard that can arise in performing maintenance. Only you can decide whether or not you should perform a given task.

⚠ WARNING **Failing to properly follow maintenance instructions and precautions can cause you to be seriously hurt or killed.**
Always follow the procedures and precautions in the owner's manual.

Safety Precautions

Make sure the engine is off before you begin any maintenance or repairs. This will eliminate several potential hazards:

－**Carbon monoxide poisoning from engine exhaust.**
Be sure there is adequate ventilation whenever you operate the engine.

－**Burns from hot parts.**
Let the engine and exhaust system cool before touching.

－**Injury from moving parts.**
Do not run the engine unless instructed to do so.

Read the instructions before you begin, and make sure you have the tools and skills required.

To reduce the possibility of fire or explosion, be careful when working around gasoline. Use only a nonflammable solvent, not gasoline, to clean parts. Keep cigarettes, sparks, and flames away from all fuel-related parts.

MAINTENANCE SCHEDULE

Performed at every indicated month or operating hour interval, whichever comes first. / ITEM		Each use	First month or 20 Hrs.	Every 3 months or 50 Hrs.	Every 6 months or 100 Hrs.	Every year or 300 Hrs.
• Engine oil	Check level	○				
	Change		○		○	
• Air cleaner	Check	○				
	Clean			○(1)		
• Idle speed	Check-Adjust					○(2)
• Spark plug	Check-Clean				○	
• Spark arrester	Clean				○	
• Combustion chamber	Clean					○(2)
• Valve clearance	Check-Adjust					○(2)
• Fuel tank and strainer	Clean					○(2)
• Fuel tube	Check	Every 2 years(Replace if necessary) (2)				
Impeller	Check					○(2)
Impeller clearance	Check					○(2)
Pump inlet valve	Check					○(2)

• Emission-related items.

(1) Service more frequently when used in dusty areas.

(2) These items should be serviced by your servicing dealer, unless you have the proper tools and are mechanically proficient. Refer to shop manual for service procedures.

REFUELING

Fuel tank capacities：
50ZB23-3.1Q(A)/80ZB20-3.1Q(A)/ 50ZB60-4.5Q/80WB30-4.5Q: 3.6 L
100ZB30-5.5Q: 6 L

With the engine stopped and on a level surface, remove the fuel tank cap and check the fuel level. Refill the tank if the fuel level is low.

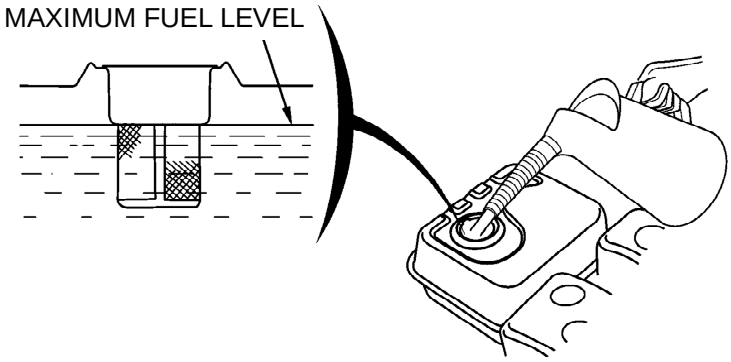

Refuel in a well-ventilated area before starting the engine. If the engine has been running, allow it to cool. Refuel carefully to avoid spilling fuel. Do not fill the fuel tank above the fuel strainer shoulder. After refueling, tighten the fuel tank cap securely.
Never refuel the engine inside a building where gasoline fumes may reach flames or sparks. Keep gasoline away from appliance pilot lights, barbecues, electric appliances, power tools, etc.
Spilled fuel is not only a fire hazard, it causes environmental damage. Wipe up spills immediately.

NOTICE **Do not fill above the shoulder of the fuel strainer (maximum fuel level).**

Refuel in a well-ventilated area before starting the engine. If the engine has been running, allow it to cool. Refuel carefully to avoid spilling fuel. Do not fill the fuel tank above the fuel strainer shoulder. After refueling, tighten the fuel tank cap securely.

Never refuel the engine inside a building where gasoline fumes may reach flames or sparks. Keep gasoline away from appliance pilot lights, barbecues, electric appliances, power tools, etc.

Spilled fuel is not only a fire hazard, it also causes environmental damage. Wipe up spills immediately.

NOTICE **Fuel can damage paint and plastic. Be careful not to spill fuel when filling your fuel tank. Damage caused by spilled fuel is not covered under warranty.**

ENGINE OIL CHANGE

Drain the used oil while the engine is warm. Warm oil drains quickly and completely.

1. Place a suitable container below the engine to catch the used oil, and then remove the oil filler cap/dipstick, drain plug and sealing washer.

2. Allow the used oil to drain completely, and then reinstall the drain plug, and tighten it securely.
   Please dispose of used motor oil in a manner that is compatible with the environment. We suggest you take used oil in a sealed container to your local recycling center or service station for reclamation. Do not throw it in the trash; pour it on the ground, or down a drain.

3. With the engine in a level position, fill to the outer edge of the oil filler hole with the recommended oil.

   Engine oil capacities
   50ZB23-3.1Q(A)/ 80ZB20-3.1Q(A)/ 80WB30-4.5Q: 0.6 L
   100ZB30-5.5Q: 1.1 L

NOTICE **Running the engine with a low oil level can cause engine damage.**

4. Screw in the oil filler cap/dipstick securely.

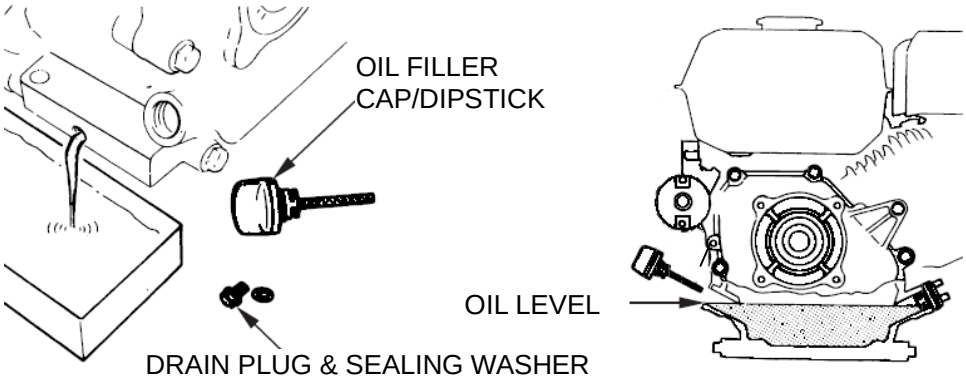

ENGINE OIL RECOMMENDATIONS

Oil is a major factor affecting performance and service life. Use 4-stroke automotive detergent oil.

SAE 10W-30 is recommended for general use. Other viscosities shown in the chart may be used when the average temperature in your area is within the recommended range.

SAE Viscosity Grades

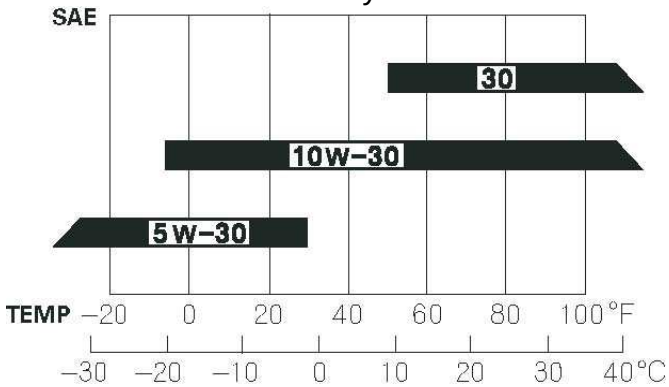

AMBIENT TEMPERATURE

The SAE oil viscosity and service classification are in the API label on the oil container. We recommend that you use API SERVICE category SJ oil.

The recommended operating range of this pump is 23 ℉ to 104 ℉ (−5 ℃ to 40 ℃).

AIR FILTER CLEANING

A dirty air filter will restrict air flow to the carburetor, reducing engine performance. If you operate the pump in very dusty areas, clean the air filter more frequently than specified in the MAINTENANCE SCHEDULE (see page 19).

1. Clean the air filter in warm soapy water, rinse, and dry it thoroughly. Or clean in nonflammable solvent and dry it thoroughly.

2. Dip the air filter in clean engine oil, and then squeeze out all excess oil. The engine will smoke when started if too much oil is left in the foam.

3. Wipe dirt from the air cleaner base and cover, using a moist rag. Be careful to prevent dirt from entering the air duct that leads to the carburetor.

SPARK PLUG SERVICE

Recommended spark plug: F7RTC or other equivalents.

NOTICE **Incorrect spark plugs can cause engine damage.**

1. Disconnect the spark plug cap, and remove any dirt from around the spark plug area.

2. Remove the spark plug with a spark plug wrench.

3. Inspect the spark plug. Replace it if the electrodes are worn, or if the insulator is cracked or chipped.

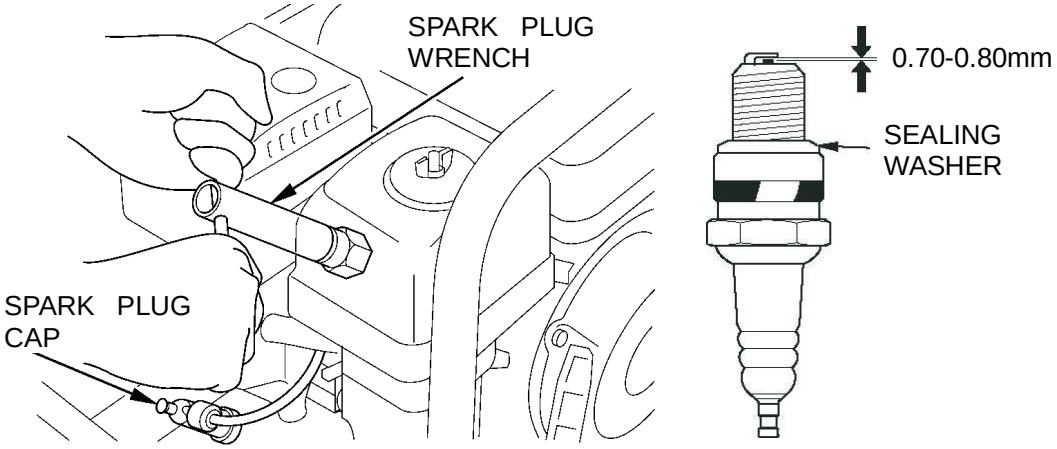

4. Measure the spark plug electrode gap with a suitable gauge. Correct the gap if necessary, by carefully bending the side electrode. The gap should be: 0.028 －0.031 in (0.70－0.80 mm).

5. Install the spark plug carefully, by hand, to avoid cross-threading.

6. After the spark plug seats, tighten with a spark plug wrench to compress the sealing washer.
   If reinstalling the used spark plug, tighten 1/8－1/4 turn after the spark plug seats.
   If installing a new spark plug, tighten 1/2 turn after the spark plug seats.

NOTICE **A loose spark plug can overheat and damage the engine. Over tightening the spark plug can damage the threads in the cylinder head.**

7. Attach the spark plug cap.

SPARK ARRESTER SERVICE (optional equipment)

Your engine is not factory-equipped with a spark arrester. In some areas, it is illegal to operate an engine without a spark arrester. Check local laws and regulations. A spark arrester is available from authorized servicing dealers.

The spark arrester must be serviced every 100 hours to keep it functioning as designed.

If the engine has been running, the muffler will be very hot. Allow the muffler to cool before servicing the spark arrester.

1. Remove the two 8 mm nuts, and remove the muffler.
2. Remove the four 5 mm screws, and remove the muffler protector from the muffler.
3. Remove the 4 mm screw from the spark arrester, and remove the spark arrester from the muffler.

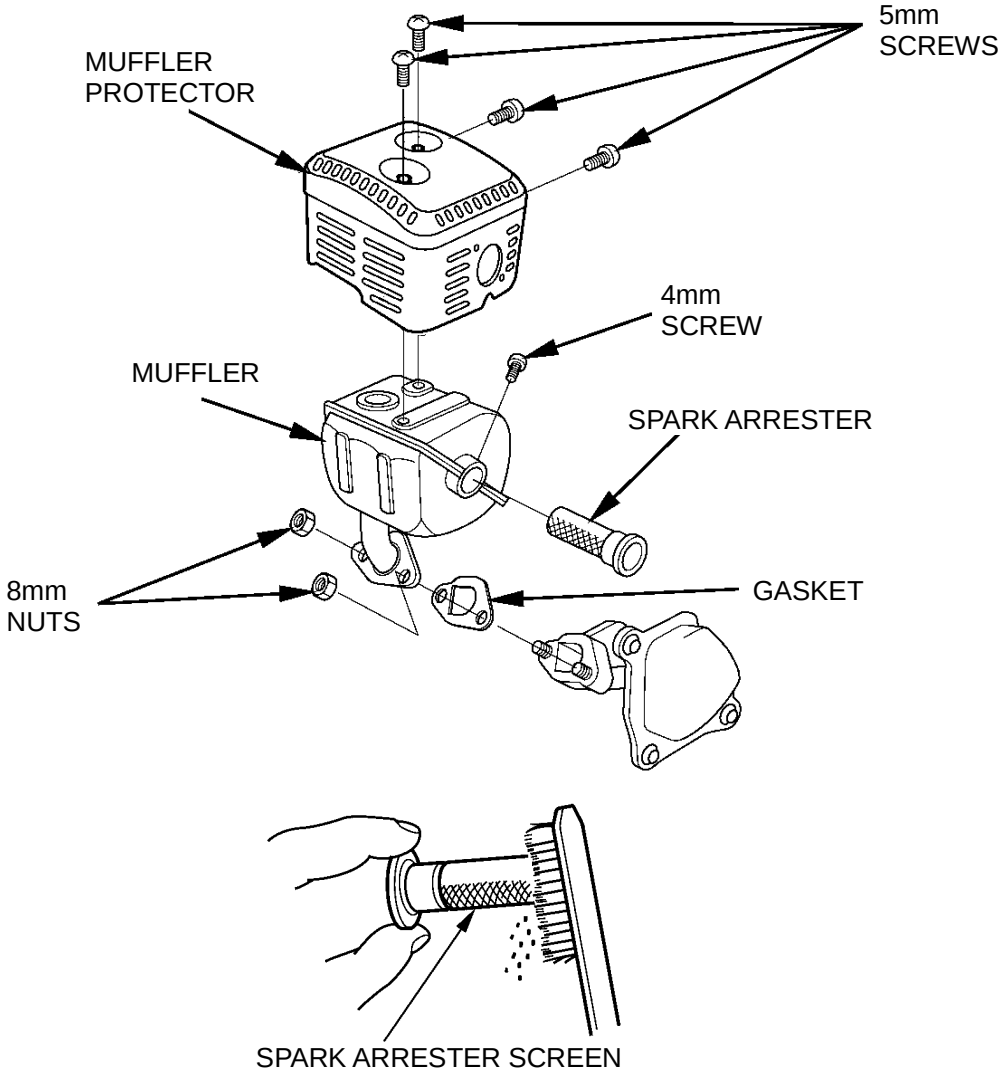

4. Use a brush to remove carbon deposits from the spark arrester screen. Be careful to avoid damaging the screen.
   The spark arrester must be free of breaks and holes. Replace the spark arrester if it is damaged.

5. Install the spark arrester, muffler protector, and muffler in the reverse order of disassembly using a new gasket.

9. STORAGE/ TRANSPORTING

STORAGE PREPARATION

Proper storage preparation is essential for keeping your pump troublefree and looking good. The following steps will help to keep rust and corrosion from impairing your pump's function and appearance, and will make the engine easier to start when you use the pump again.

Cleaning

1. Wash the engine and pump.

   Wash the engine by hand, and be careful to prevent water from entering the air cleaner or muffler opening. Keep water away from controls and all other places that are difficult to dry, as water promotes rust.

   NOTICE

   - **Using a garden hose or pressure washing equipment can force water into the air cleaner or muffler opening. Water in the air cleaner will soak the air filter, and water that passes through the air filter or muffler can enter the cylinder, causing damage.**
   - **Water contacting a hot engine can cause damage. If the engine has been running, allow it to cool for at least half an hour before washing.**

2. Wipe dry all accessible surfaces.

3. Fill the pump chamber with clean, fresh water, start the engine outdoors, and let it run until it reaches normal operating temperature to evaporate any external water.

NOTICE **Dry operation will damage the pump seal. Be sure the pump chamber is filled with water before starting the engine.**

4. Stop the engine, and allow it to cool.

5. Remove the pump drain plug, and flush the pump with clean, fresh water. Allow the water to drain from the pump chamber, and then reinstall the drain plug.

6. After the pump is clean and dry, touch up any damaged paint, and coat areas that may rust with a light film of oil. Lubricate controls with a silicone spray lubricant.

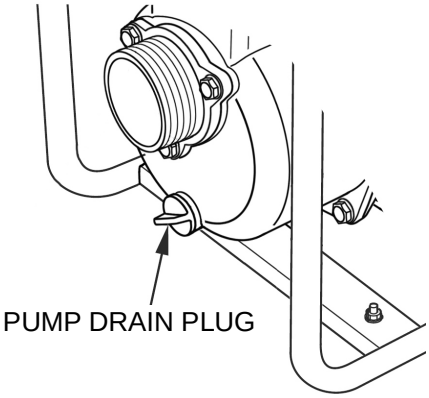

Fuel

Gasoline will oxidize and deteriorate in storage. Old gasoline will cause hard starting, and it leaves gum deposits that clog the fuel system. If the gasoline in your engine deteriorates during storage, you may need to have the carburetor and other fuel system components serviced or replaced.

The length of time that gasoline can be left in your fuel tank and carburetor without causing functional problems will vary with such factors as gasoline blend, your storage temperatures, and whether the fuel tank is partially or completely filled. The air in a partially filled fuel tank promotes fuel deterioration. Very warm storage/temperatures accelerate fuel deterioration. Fuel deterioration problems may occur within a few months, or even less if the gasoline was not fresh when you filled the fuel tank.

The Distributor's Limited Warranty does not cover fuel system damage or engine performance problems resulting from neglected storage preparation.

You can extend fuel storage life by adding a fuel stabilizer that is formulated for that purpose, or you can avoid fuel deterioration problems by draining the fuel tank and carburetor.

Adding a Fuel Stabilizer to Extend Fuel Storage Life

When adding a fuel stabilizer, fill the fuel tank with fresh gasoline. If only partially filled, air in the tank will promote fuel deterioration during storage. If you keep a container of gasoline for refueling, be sure that it contains only fresh gasoline.

1. Add fuel stabilizer following the manufacturer's instructions.

2. After adding a fuel stabilizer, run the engine outdoors for 10 minutes to be sure that treated gasoline has replaced the untreated gasoline in the carburetor.

NOTICE **Dry operation will damage the pump seal. Be sure the pump chamber is filled with water before starting the engine.**

3. Stop the engine, and move the fuel valve lever to the OFF position.

Draining the Fuel Tank and Carburetor

1. Place an approved gasoline container below the carburetor, and use a funnel to avoid spilling fuel.

2. Remove the carburetor drain bolt and sediment cup, and then move the fuel valve lever to the ON position.

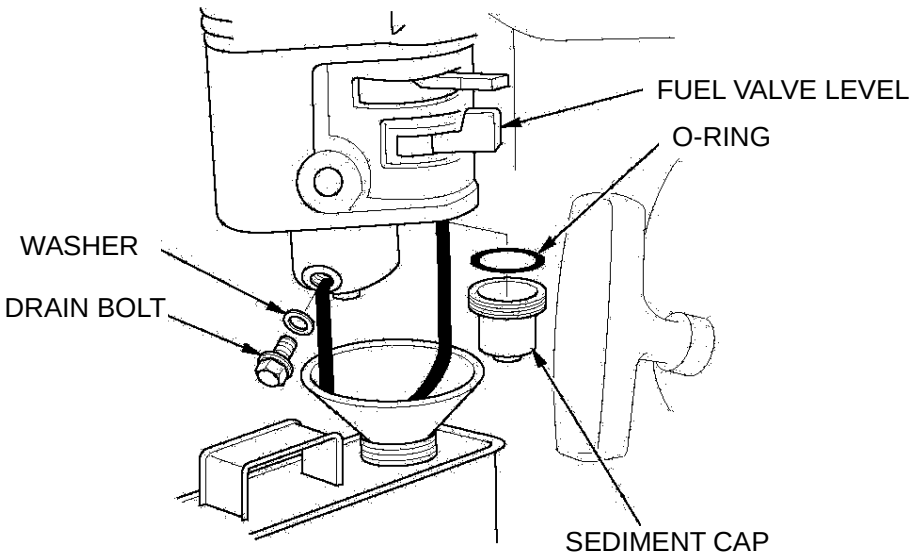

3. After all the fuel has drained into the container, reinstall the drain bolt and sediment cup. Tighten them securely.

STORAGE PR PROCEDURE

1. Change the engine oil (see page 21).

2. Remove the spark plug (see page 22).

3. Pour a tablespoon (5－10 cc) of clean engine oil into the cylinder.

4. Pull the starter grip several times to distribute the oil in the cylinder.

5. Reinstall the spark plug and attach the spark plug cap.

6. Pull the recoil starter grip slowly until resistance is felt. This will close the valves so moisture cannot enter the engine cylinder. Return the recoil starter grip gently.

STORAGE PRECAUTIONS

If your pump will be stored with gasoline in the fuel tank and carburetor, it is important to reduce the hazard of gasoline vapor ignition. Select a well-ventilated storage area away from any appliance that operates with a flame, such as a furnace, water heater, or clothes dryer. Also avoid any area with a spark-producing electric motor, or where power tools are operated.

If possible, avoid storage areas with high humidity, because that promotes rust and corrosion.

Unless all fuel has been drained from the fuel tank, leave the fuel valve lever in the OFF position to reduce the possibility of fuel leakage.

Place the pump on a level surface. Tilting can cause fuel or oil leakage.

With the engine and exhaust system cool, cover the pump to keep out dust. A hot engine and exhaust system can ignite or melt some materials. Do not use sheet plastic as a dust cover. A nonporous cover will trap moisture around the pump, promoting rust and corrosion.

REMOVAL FROM STORAGE

Check your pump as described in the CHECK BEFORE OPERATION chapter of this manual.

If the fuel was drained during storage preparation, fill the tank with fresh gasoline. If you keep a container of gasoline for refueling, be sure that it contains only fresh gasoline. Gasoline oxidizes and deteriorates over time, causing hard starting.

If the cylinder was coated with oil during storage preparation, the engine may smoke briefly at startup. This is normal.

TRANSPORTING

If the pump has been running, allow the engine to cool for at least 15 minutes before loading the pump on the transport vehicle. A hot engine and exhaust system can burn you and can ignite some materials.

Keep the pump level when transporting to reduce the possibility of fuel leakage. Move the fuel valve lever to the OFF position.

10. TROUBLESHOOTING

ENGINE

Engine Will Not Start	Possible Cause	Correction
1. Check control positions.	Fuel valve OFF.	Move fuel valve lever to ON position.
	Choke open.	Move choke lever to CLOSED position unless engine is warm.
	Ignition switch OFF.	Turn ignition switch to ON.
2. Check fuel.	Out of fuel.	Refuel (p. 20).
	Bad fuel; pump stored without treating or draining gasoline, or refuel with bad gasoline.	Drain fuel tank and carburetor (p. 26). Refuel with fresh gasoline (p. 20).
3. Remove and inspect spark plug.	Spark plug faulty, fouled, or improperly gapped.	Gap or replace spark plug (p. 22).
	Spark plug wet with fuel (flooded engine).	Dry and reinstall spark plug. Start engine with throttle lever in FAST position.
4. Take engine to an authorized servicing dealer, or refer to shop manual.	Fuel filter clogged, carburetor malfunction, ignition malfunction, valves stuck, etc.	Replace or repair faulty components as necessary.

Engine Lacks Power	Possible Cause	Correction
1. Check air filter.	Air filter clogged.	Clean or replace filter (p. 22).
2. Check fuel.	Bad fuel; pump stored without treating or draining gasoline, or refuel with bad gasoline.	Drain fuel tank and carburetor (p. 26) . Refuel with fresh gasoline (p. 20).
3. Take engine to an authorized servicing dealer, or Refer to shop manual.	Fuel filter clogged, carburetor malfunction, ignition malfunction, valves stuck, etc.	Replace or repair faulty components as necessary.

PUMP

No Pump Output	Possible Cause	Correction
1. Check pump chamber.	Pump not primed.	Prime the pump (p. 14).
2. Check suction hose.	Hose collapsed, cut or punctured.	Replace suction hose (p. 13).
	Strainer not completely underwater.	Sink the strainer and the end of a suction hose completely underwater.
	Air leak at connector.	Replace sealing washer if missing or damaged. Tighten hose connector and clamp (p. 13, 14).
	Strainer clogged.	Clean debris from strainer.
3. Measure suction and discharge head.	Excessive head.	Relocate pump and/or hoses to reduce head (p. 12, 31).
4. Check engine.	Engine lacks power.	See page 29.

Low Pump Output	Possible Cause	Correction
1. Check suction hose.	Hose collapsed, damaged, too long, or diameter too small.	Replace suction hose (p. 13).
	Air leak at connector.	Replace sealing washer if missing or damaged. Tighten hose connector and clamp (p. 13, 14).
	Strainer clogged.	Clean debris from strainer.
2. Check discharge hose.	Hose damaged, too long, or diameter too small.	Replace discharge hose (p. 14).
3. Measure suction and discharge head.	Marginal head.	Relocate pump and/or hoses to reduce head (p. 12, 31).
4. Check engine.	Engine lacks power.	See page 29.

11. Specifications

Item	Type	50ZB23-3.1Q	50ZB23-3.1QA	80ZB20-3.1Q	80ZB20-3.1QA
Pump	Length (mm)	550	430	550	515
	Width (mm)	430	385	430	420
	High (mm)	385	385	465	450
	Weight (Kg)	26	24	30	28
	Suction port diameter	2 in (50 mm)		3 in (80 mm)	
	Discharge port diameter	2 in (50 mm)		3 in (80 mm)	
	Max. suction (m)	6		6	
	Max. head (m)	23		20	
	Max. capacity (m^3/hr)	30		60	
Engine	Model	160F			
	Type	25°Tilt, Single cylinder, 4-Stroke, Forced air cool ing, OHV			
	Displacement (cc)	163			
	Power (kW/3600rpm)	3.7			
	Fuel tank capacity (L)	3.6			
	Oil capacity (L)	0.6			

Item	Type	50ZB60-4.5Q	80WB30-4.5Q	100ZB30-5.5Q
Pump	Length(mm)	550	590	635
	Width(mm)	460	480	515
	High(mm)	430	440	550
	Weight(Kg)	28	36	52
	Suction port diameter	2 in (50 mm)	3 in (80 mm)	4 in (100 mm)
	Discharge port diameter	2 in (50 mm)	3 in (80 mm)	4 in (100 mm)
	Max. suction(m)	6	6	6
	Max. head(m)	23	30	30
	Max. capacity(m^3/hr)	30	45	96
Engine	Model	200F	200F	240F
	Type	25°Tilt, Single cylinder, 4-Stroke, Forced air cool ing, OHV		
	Displacement (cc)	163	196	242
	Power (kW/3600rpm)	3.7	4.7	5.8
	Fuel tank capacity (L)	3.6	3.6	6
	Oil capacity (L)	0.6	0.6	1.1

Tuneup

Spark plug gap	0.70 －0.80 mm	See page 22.
Idle speed	1400±150 rpm	
Valve clearance (cold)	Exhaust: 0.20 ± 0.02mm Intake: 0.15 ± 0.02 mm	
Other specifications	No other adjustments needed.	

12. TECHNICAL & CONSUMER INFORMATION

Carburetor Modification for High Altitude Operation

At high altitude, the standard carburetor air-fuel mixture will be too rich. Performance will decrease, and fuel consumption will increase. A very rich mixture will also foul the spark plug and cause hard starting. Operation at an altitude that differs from that at which this engine was certified, for extended periods of time, may increase emissions.

High altitude performance can be improved by specific modifications to the carburetor. If you always operate your pump at altitudes above 5,000 feet (1,500 meters), have your servicing dealer perform this carburetor modification. This engine, when operated at high altitude with the carburetor modifications for high altitude use, will meet each emission standard throughout its useful life.

Even with carburetor modification, engine horsepower will decrease about 3.5% for each 1,000 feet (300 meters) increase in altitude. The effect of altitude on horsepower will be greater than this if no carburetor modification is made.

NOTICE

When the carburetor has been modified for high altitude operation, the air-fuel mixture will be too lean for low altitude use. Operation at altitudes below 5,000 feet (1,500meters) with a modified carburetor may cause the engine to overheat and result in serious engine damage. For use at low altitudes, have your servicing dealer return the carburetor to original factory specifications.

Oxygenated Fuels

Some conventional gasolines are being blended with alcohol or an ether compound. These gasolines are collectively referred to as oxygenated fuels. To meet clean air standards, some areas of the United States and Canada use oxygenated fuels to help reduce emissions.

If you use an oxygenated fuel, be sure it is unleaded and meets the minimum octane rating requirement.

Before using an oxygenated fuel, try to confirm the fuel’s contents. Some states/provinces require this information to be posted on the pump.

The following are the EPA-approved percentages of oxygenates:

ETHANOL——(ethyl or grain alcohol) 10% by volume.

You may use gasoline containing up to 10% ethanol by volume. Gasoline containing ethanol may be marketed under the name ‘‘Gasohol’’.

MTBE————(methyl tertiary butyl ether) 15% by volume
You may use gasoline containing up to 15% MTBE by volume.

METHANOL——(methyl or wood alcohol) 5% by volume
You may use gasoline containing up to 5% methanol by volume as long as it also contains cosolvents and corrosion inhibitors to protect the fuel system. Gasoline containing more than 5% methanol by volume may cause starting and/or performance problems. It may also damage metal, rubber, and plastic parts of your fuel system.

If you notice any undesirable operating symptoms, try another service station, or switch to another brand of gasoline.

Fuel system damage or performance problems resulting from the use of an oxygenated fuel containing more than the percentages of oxygenates mentioned above are not covered under warranty.

Emission Control System Information

Source of Emissions

The combustion process produces carbon monoxide, oxides of nitrogen, and hydrocarbons. Control of hydrocarbons and oxides of nitrogen is very important because, under certain conditions, they react to form photochemical smog when subjected to sunlight. Carbon monoxide does not react in the same way, but it is toxic.

This utilizes lean carburetor settings and other systems to reduce the emissions of carbon monoxide, oxides of nitrogen, and hydrocarbons.

Tampering and Altering

Tampering with or altering the emission control system may increase emissions beyond the legal limit. Among those acts that constitute tampering are:

- Removal or alteration of any part of the intake, fuel, or exhaust systems.

- Altering or defeating the governor linkage or speed-adjusting mechanism to cause the engine to operate outside its design parameters.

Problems That May Affect Emissions

If you are aware of any of the following symptoms, have your engine inspected and repaired by your servicing dealer.

- Hard starting or stalling after starting.
- Rough idle.
- Misfiring or backfiring under load.
- Afterburning (backfiring).
- Black exhaust smoke or high fuel consumption.

Replacement Parts

The emission control systems on your engine were designed, built, and certified to conform with EPA and California emission regulations. We recommend the use of genuine parts whenever you have maintenance done. These original-design replacement parts are manufactured to the same standards as the original parts, so you can be confident of their performance. The use of replacement parts that are not of the original design and quality may impair the effectiveness of your emission control system.

A manufacturer of an aftermarket part assumes the responsibility that the part will not adversely affect emission performance. The manufacturer or rebuilder of the part must certify that use of the part will not result in a failure of the engine to comply with emission regulations.

Maintenance

Follow the maintenance schedule on page 27. Remember that this schedule is based on the assumption that your machine will be used for its designed purpose. Sustained high-load or high-temperature operation, or use in unusually wet or dusty conditions, will require more frequent service.

Air Index

An Air Index Information hang tag/label is applied to engines certified to an emission durability time period in accordance with the requirements of the California Air Resources Board.

The bar graph is intended to provide you, our customer, the ability to compare the emissions performance of available engines. The lower the Air Index, the less pollution.

The durability description is intended to provide you with information relating to the engine’s emission durability period. The descriptive term indicates the useful-life period for the engine’s emission control system. See your Emission

Control Warranty for additional information.

Descriptive Term	Applicable to Emission Durability Period
Moderate	50 hours (0－65 cc) 125 hours (greater than 65 cc)
Intermediate	125 hours (0－65 cc) 250 hours (greater than 65 cc)
Extended	300 hours (0－65 cc) 500 hours (greater than 65 cc)

The Air Index Information hang tag must remain on the pump until it is sold. Remove the hang tag before operating the pump.

CONSUMER INFORMATION

Publications

These publications will give you additional information for maintaining and repairing your pump. You may order them from your pump dealer.

Parts Catalog

This manual provides complete, illustrated parts lists.

Customer Service Information

Servicing dealership personnel are trained professionals. They should be able to answer any question you may have. If you encounter a problem that your dealer does not solve to your satisfaction, please discuss it with the dealership's management. The Service Manager or General Manager can help. Almost all problems are solved in this way.

Loncin motor co., Ltd.

Add:No.99Hualong Road,Jiulongpo District,Chongqing,China

Tel:86 23 8980 5678/86 23 8980 8505

Fax:86 23 8906 7566

Email:marketing@loncinengine.com

Website:www.loncinengine.com

PRINTED IN CHINA